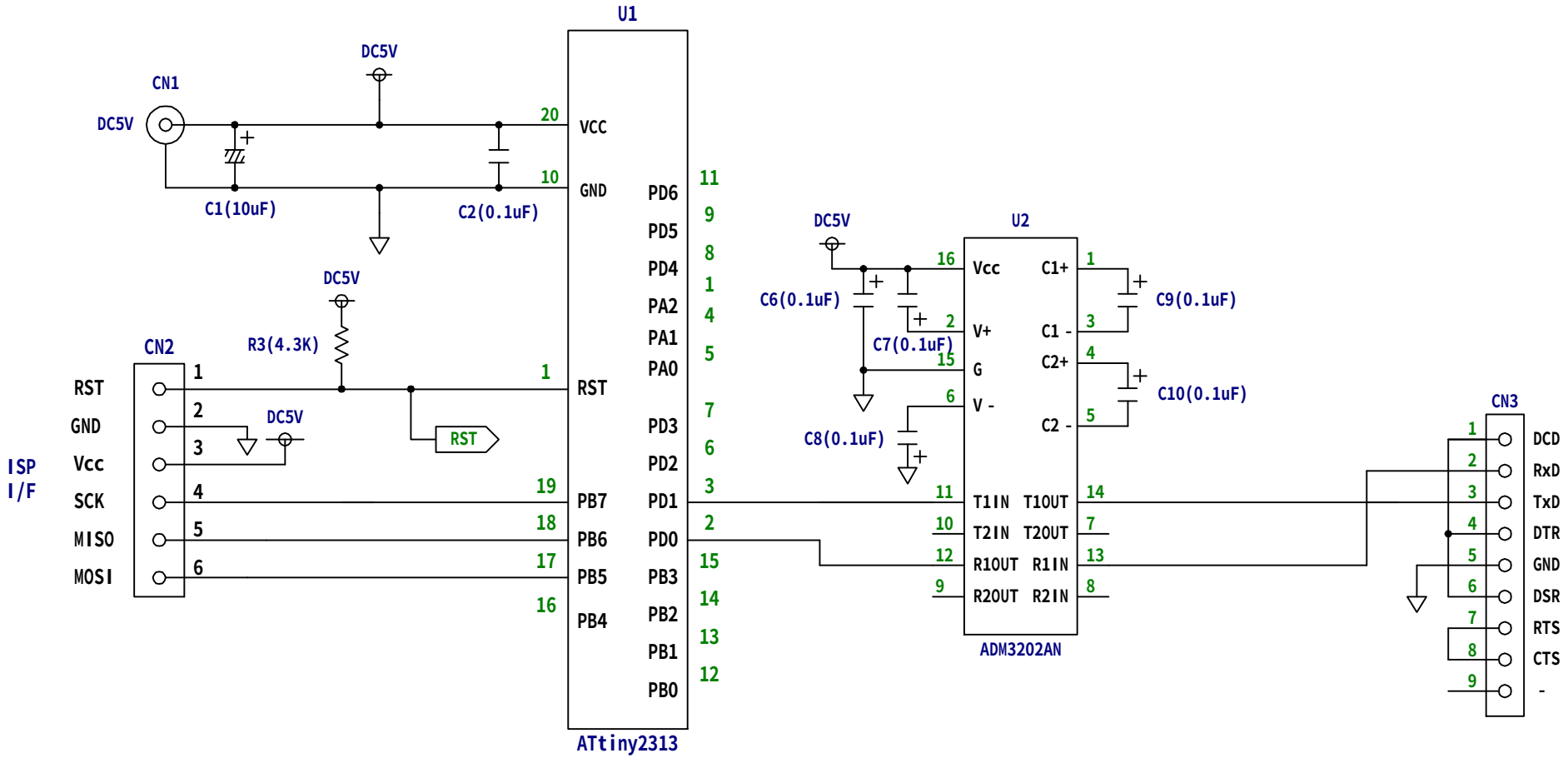
U1
DC5V
CN1
DC5V
20
VCC
10
GND
C1(10uF)
C2(0.1uF)
PD6
PD5
PD4
PA2
PA1
PA0
PD3
PD2
PD1
PD0
PB3
PB2
PB1
PB0
11
9
8
1
4
5
7
6
3
2
15
14
13
12
DC5V
R3(4.3K)
CN2
1
RST
1
RST
2
GND
3
Vcc
4
SCK
5
MISO
6
MOSI
ISP
I/F
DC5V
RST
19
PB7
18
PB6
17
PB5
16
PB4
ATtiny2313
DC5V
U2
16
Vcc
C1+
1
C6(0.1uF)
C9(0.1uF)
2
V+
C1 -
3
C7(0.1uF)
15
G
C2+
4
6
V -
C10(0.1uF)
C2 -
5
C8(0.1uF)
11
T1IN
T1OUT
14
10
T2IN
T2OUT
7
12
R1OUT
R1IN
13
9
R2OUT
R2IN
8
ADM3202AN
CN3
1
DCD
2
RxD
3
TxD
4
DTR
5
GND
6
DSR
7
RTS
8
CTS
9
-